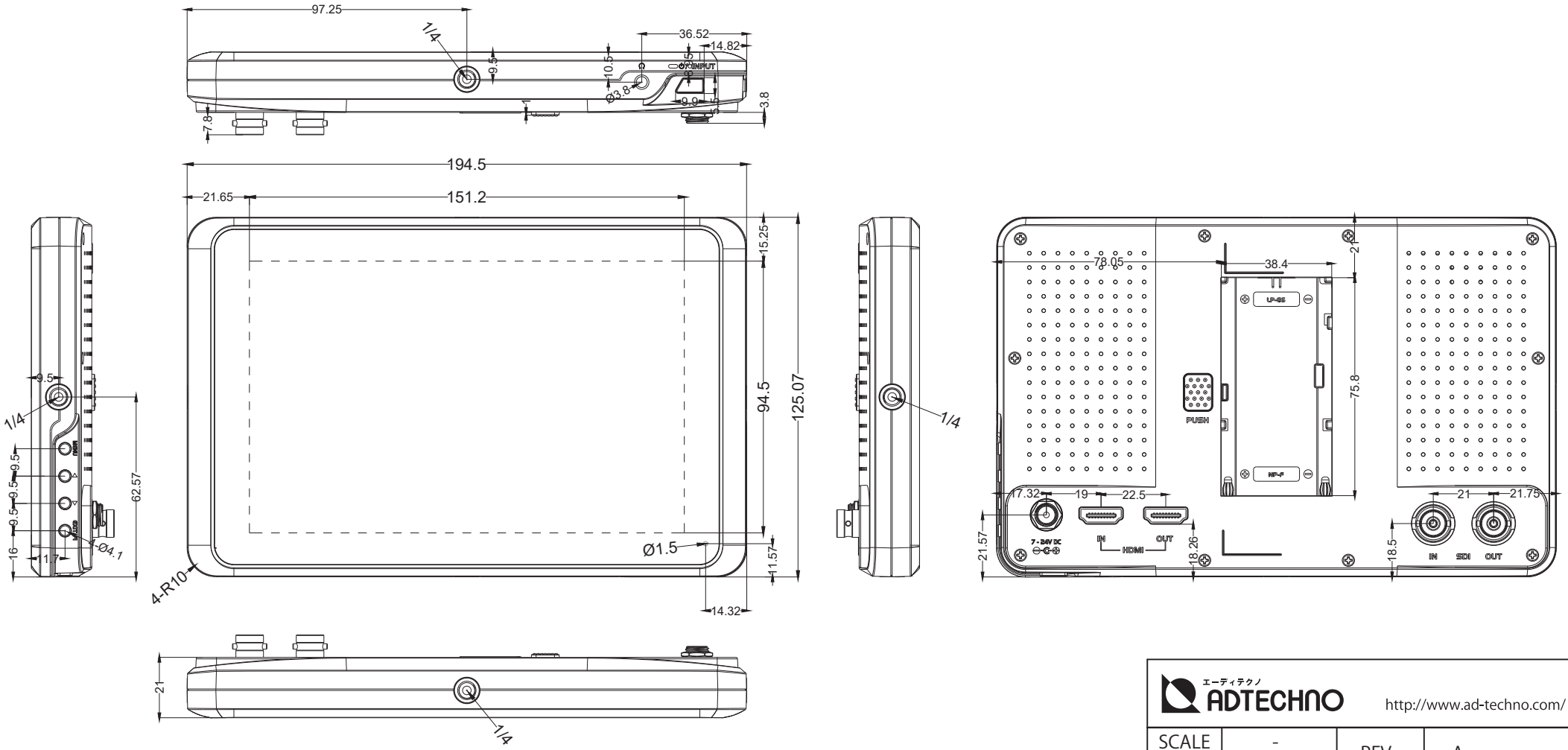

ADTECHNO (エーディテクノ) http://www.ad-techno.com/			
SCALE	-	REV.	A
UNIT	MM		
SHEET	1/1	DWG NO.	
DATE			
TITLE			
MODEL NO.	75SB		